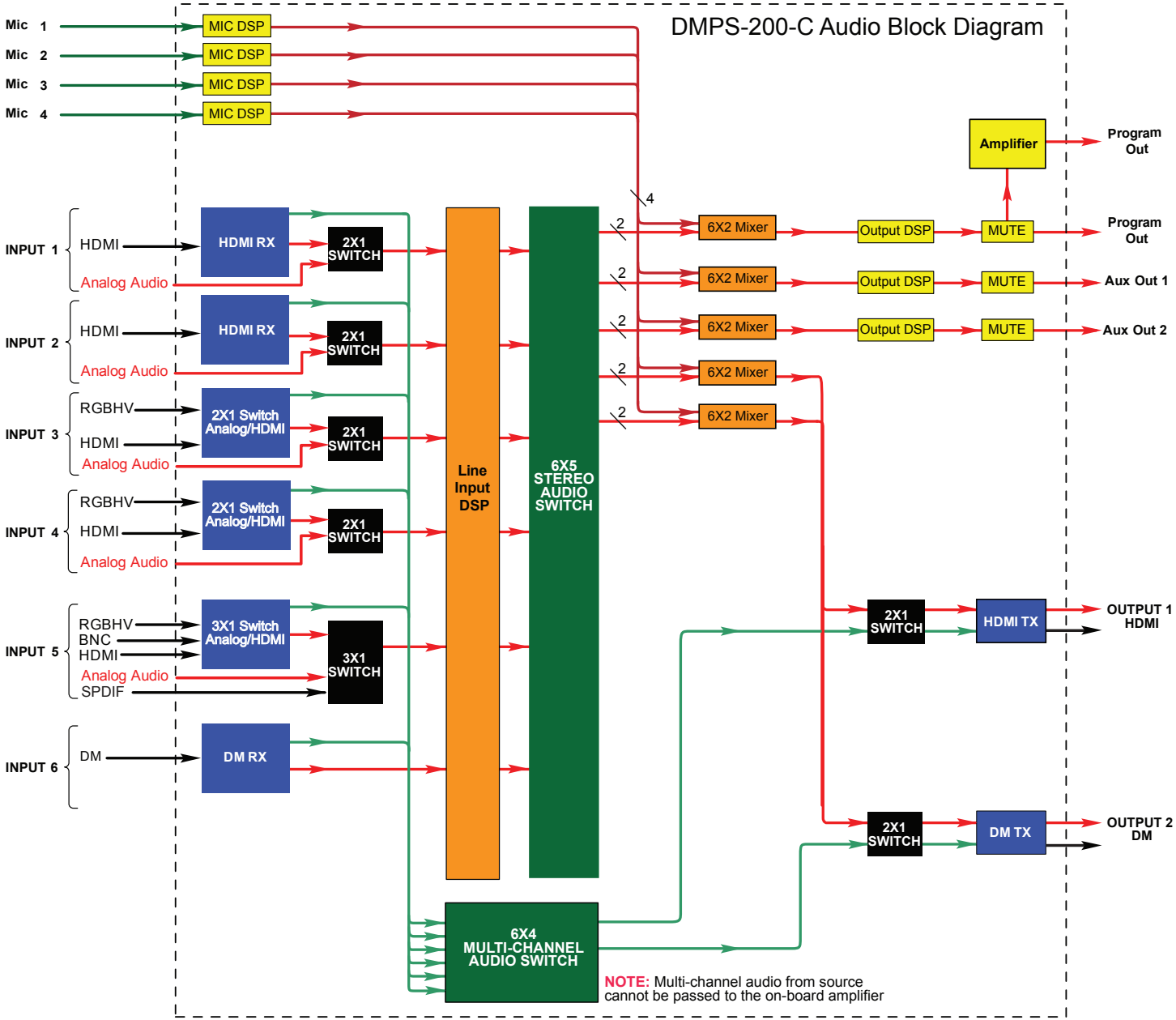DMPS-200-C Audio Block Diagram